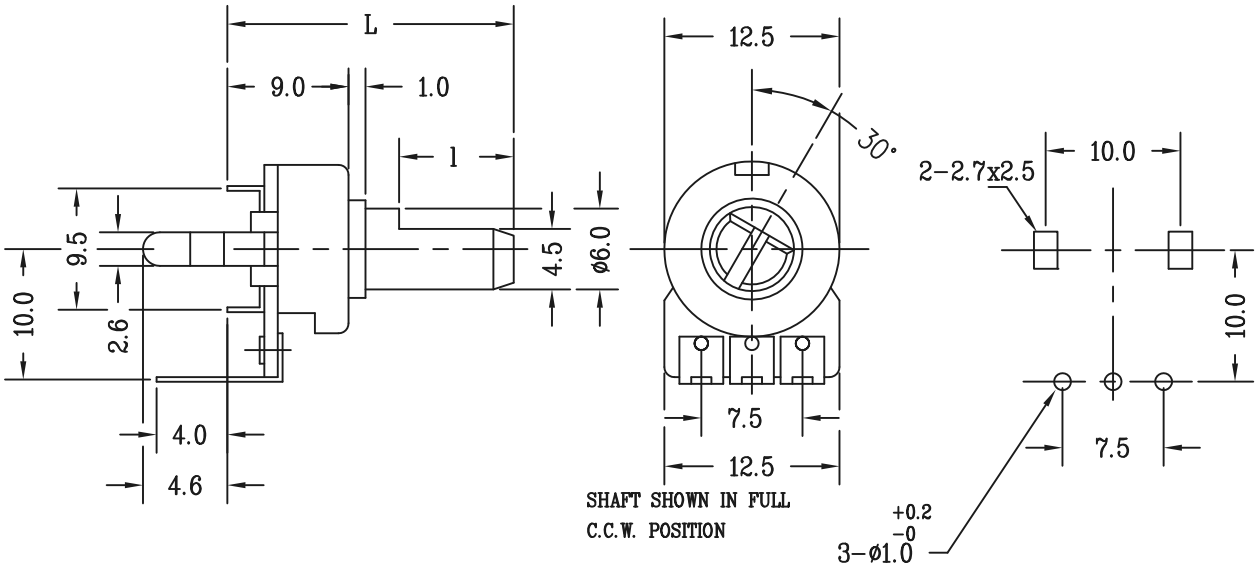

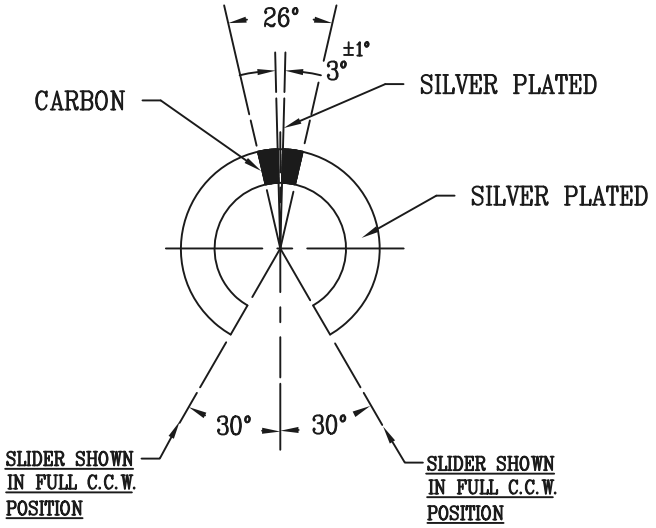

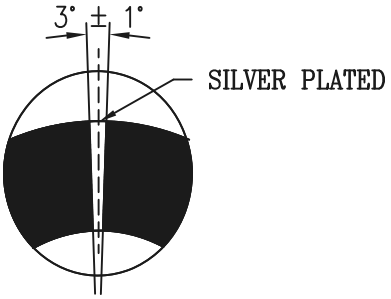

AN ENLARGED VIEW

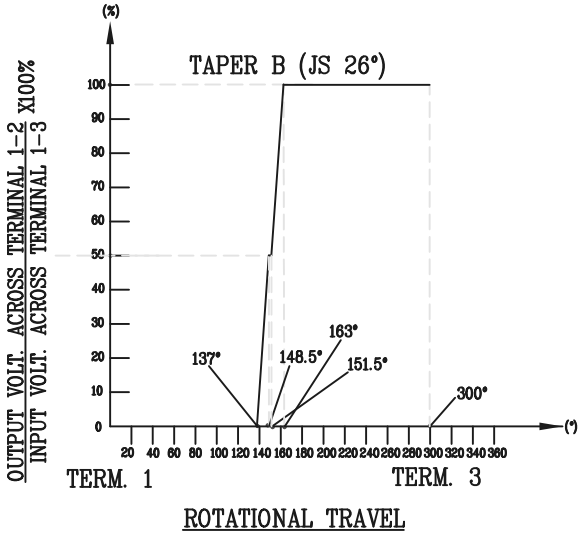

		Tolerances Unless Otherwise Specified			TOMY INDUSTRAIL CO., LIMITED
SCALE	UNIT	L ≤ 10		±0.3	
	mm	10 < L < 100		±0.5	DRAWING TITLE
Revision Notes		100 ≤ L		±0.8	JS SERIES
		Angular Dimension		±5°	DRAWING NAME
		DESIGNED	DRAWN	CHECKED	APPROVED	RV121NP(H)-JS-26°-M3°
			EDDIE WONG			DRAWING NO. JS-RV121-02-02-A01